VAPOR RETURN HOSE COUPLERS

Fast, safe vapor recovery is easy with probed hose couplers. Hose shank end bands to a vapor recovery hose and the probe automatically opens the poppet of the vapor check valve when coupled. The coupler comes in three sizes for use with most vapor check valves and hose configurations. The poppetted vapor return hose coupler design prevents vapor from escaping when disconnected. The probe automatically opens the vapor check valve when connected properly. The design also offers low restrictive vapor passage. The body and probe are made of heat-treated anodized aluminum with forged bronze cams and stainless steel pins, and the poppet has a replaceable fluorocarbon seal.

Features

- Meets API RP 1004 Standard.
- Heat-treated, aluminum alloy body and brass probe.
- Forged bronze cams and stainless steel pins.
- Used with probe for opening vapor check valve.

774-320-02

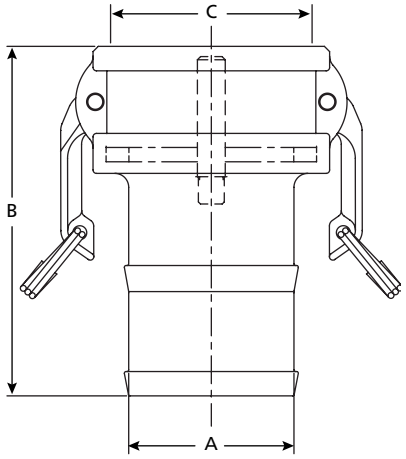

MODEL UNIT	774-320-01	774-320-02	774-320-03
Dim. A (Inches/Millimeters)	3.00/76.2	3.00/76.2	4.00/101.6
Dim. B (Inches/Millimeters)	6.28/159.51	6.62/168.15	6.62/168.15
Dim. C (Inches/Millimeters)	3.62/91.95	4.75/120.65	4.75/120.65
Weight (Pounds/Kilograms)	2.38/1.08	3.00/1.36	3.38/1.53

Vapor Return Hose Couplers Parts List

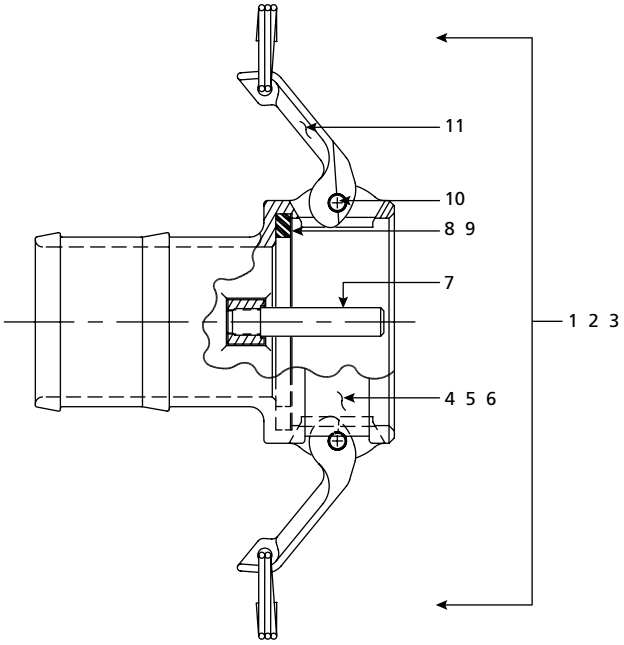

#	PART NAME	PART NUMBER	#	PART NAME	PART NUMBER
1	774-CV 3” × 3” Assembly	774-320-01	7	Probe	774-112-01
2	774-CV 4” × 3” Assembly	774-320-02	8	3” Gasket	774-202-03
3	774-CV 4” × 4” Assembly	774-320-03	9	4” Gasket	774-202-04
4	CV 3” × 3” Body Only	774-416-01	10	Groove Pin	11125-07
5	CV 4” × 3” Body Only	774-417-01	11	Cam & Ring Assembly	774-116-03
6	CV 4” × 4” Body Only	774-418-01			